PRODUCT ID: 28588

Post

MODEL

P4X4D60B

DIMENSIONS

60" H x 12" W x 12" D (est. 29.587 lbs)

CONSTRUCTION

Finish: Duranodic Bronze
Material: 4" x 4" fluted extruded aluminum post (6063-T6) with a sign mounting channel on each side, one end cap and 12" sq. welded base plate. Base plate is a 3/8" thick aluminum plate with pre-drilled anchoring holes and 4-4" high welded gussets.

Product View

NOTE: Sign image may not exactly represent the finished product. For illustration purposes only.

Front View

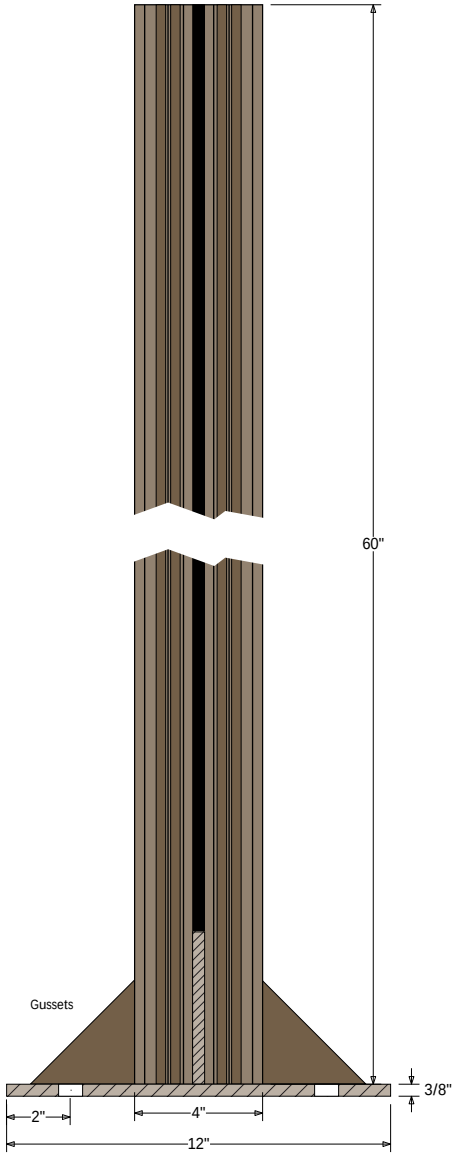

Single Post Detail

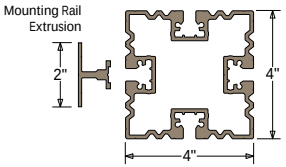

Base Plate Detail

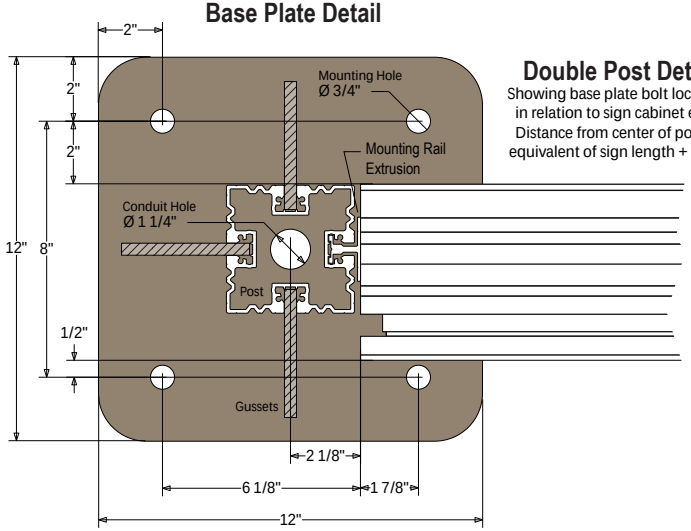

Double Post Detail

Showing base plate bolt locations in relation to sign cabinet edge. Distance from center of posts is equivalent of sign length + 4 1/2"

Lightbox Shop
www.lightboxshop.com
Manufactured in
Eries, PA 16509

Proudly Made in the USA

Copyright (C) 2019